LINEARIZED COMPRESSIBLE FLOW*

BY

H. PORITSKY

General Electric Company

1. Introduction. The solutions of Laplace's equation indicated in the preceding paper (referred to in the following as I) find ready application in the study of linearized compressible flow. This linearized approximate theory of high-velocity flow is based on the assumption that velocity components induced by an obstacle placed in a uniform stream of high velocity W_0 are small compared to W_0. Under this assumption the velocity potential φ of the disturbed flow (that is, of the flow induced by the obstacle) can be shown to satisfy the differential equation:

$$\varphi_{xx} + \varphi_{yy} + (1 - M^2)\varphi_{zz} = 0, \tag{1.1}$$

where subscripts denote derivatives, and M is the Mach number of the flow, that is, the velocity of the stream W_0, assumed in the direction of the z-axis, divided by the velocity of sound at the pressure of the undisturbed flow. The same equation is also satisfied (under the assumption in question) by other thermodynamic gas quantities, for instance by the pressure p which is given by

$$p - p_0 = -W_0\rho_0 w = -W_0\rho_0\varphi_z , \tag{1.2}$$

as well as by the velocity components u, v, w, given by

$$u = \varphi_x , \qquad v = \varphi_y , \qquad w = \varphi_z . \tag{1.3}$$

Equation (1.1) holds both for $M < 1$, that is when the flow is subsonic, as well as for $M > 1$, when the flow is supersonic. In the former case, by introducing coordinates

$$x, y, z = \beta z', \qquad \beta^2 = (1 - M^2) \tag{1.4}$$

one transforms the Eq. (1.1) into the Laplace equation

$$\varphi_{xx} + \varphi_{yy} + \varphi_{z'z'} = 0. \tag{1.5}$$

On the other hand, to obtain such a transformation for the supersonic case, it is necessary to carry out the following change of variables:

$$x, y, z = i\beta z', \qquad \beta^2 = M^2 - 1 \tag{1.6}$$

in which real values of z correspond to pure imaginary values of the variable z'. The solutions of I thus have to be re-examined in view of this substitution.

Of much recent interest are supersonic "conical" flows, that is, flows in which the velocity components u, v, w, the pressure p, etc. remain constant along straight lines through a point (the vertex or origin). Such flows are produced by conical obstacles, that is by solids whose boundary consists of straight lines through a vertex. To satisfy the assumptions of the linearized equation (1.1), the conical obstacle must lie close to the z-axis or it may be a thin fin containing the z-axis and inclined at a small angle of attack to the main flow.

*Received April 26, 1948.

It will be recognized that for supersonic conical flows, u, v, w, $p - p_0$ are homogeneous solutions of Eq. (1.5) of degree zero, while the velocity potential is a solution of Eq. (1.5) of degree 1.

The theory of conical flows is due essentially to A. Busemann,[1] where in the bibliography are given references to earlier papers. Among more recent studies of conical flows are these by H. J. Stewart,[2] R. M. Snow.[3]

While most of the following is devoted to homogeneous solutions of Eq. (1.1) for $M > 1$ of degree zero, solutions of degree n are also discussed. Examples are given both of conical flow and conical flow modified by superposition of other solutions.

The supersonic case $M > 1$ will be understood throughout the following.

2. Conical supersonic flow. To adapt the solutions of I to the solutions of Eq. (1.1) for $M > 1$, in view of Eqs. (1.5), (1.6) the following replacements must be made:

$$z \to z/\beta i, \tag{2.1}$$

$$R = (x^2 + y^2 + z^2)^{1/2} \to (x^2 + y^2 - z^2/\beta^2)^{1/2} = [z^2 - \beta^2(x^2 + y^2)]^{1/2}/\beta i, \tag{2.2}$$

$$Z = \frac{x + iy}{R + z} \to \beta i \frac{(x + iy)}{z + [z^2 - \beta^2(x^2 + y^2)]^{1/2}}. \tag{2.3}$$

From Eq. I. (2.20) one obtains for the general solution of (1.5) the real part of

$$f(Z) = f\left[\frac{\beta i(x + iy)}{z + (z^2 - \beta^2 r^2)^{1/2}}\right]. \tag{2.4}$$

It will also be convenient to introduce the variable

$$\epsilon = \frac{Z}{i} = \frac{\beta(x + iy)}{z + [z^2 - \beta^2(x^2 + y^2)]^{1/2}} = \xi + i\eta = \rho e^{i\omega} \tag{2.5}$$

and this can be used as the argument of f in place of Z; here ξ, η denote the real and imaginary parts of ϵ; ρ its absolute value, ω its argument. Thus, one is led to the solutions

$$f(\epsilon), \qquad \epsilon = \frac{\beta r e^{i\omega}}{z + (z^2 - \beta^2 r^2)^{1/2}}. \tag{2.6}$$

Each velocity component u, v, w, for conical flows can be represented as the real part of an analytic function of ϵ.

Turning to the relations I. (4.4) between the velocity components u, v, w—these relations are equivalent to the vanishing of the curl of the velocity vector—we must keep in mind that while I. (4.15) yields a solution of the equation

$$\frac{\partial U}{\partial z} = \frac{\partial W}{\partial x}, \tag{2.7}$$

---

[1]A. Busemann, *Infinitesimale kegelige Ueberschallströmung*, Schriften der deutschen Akademie der Luftfahrtforschung **7B**, 105-122 (1943).

[2]H. J. Stewart, *The lift of a delta wing at supersonic speeds*, Q. Appl. Math. **4**, 246-254 (1946).

[3]R. M. Snow, *Aerodynamics of thin quadrilatera iwings at supersonic speeds*, Q. Appl. Math. **5**, 417-428 (1948).

for the *complete* functions U, W (that is, not only for their real parts) in the *old* coordinates, on account of (2.1), it must be replaced by

$$U = \frac{\beta i}{2} \int \frac{Z^2 - 1}{Z} dW = -\frac{\beta}{2} \int \frac{\epsilon^2 + 1}{\epsilon} dW \tag{2.8}$$

to furnish a solution of (2.7) in the *new* coordinates. Likewise I. (4.17) is replaced by

$$V = \frac{\beta}{2} \int \frac{Z^2 + 1}{Z} dW = \frac{\beta i}{2} \int \frac{\epsilon^2 - 1}{\epsilon} dW. \tag{2.9}$$

Taking real parts of (2.8), (2.9) to obtain u, v, one obtains

$$u + iv = -\frac{\beta}{2}\left(\int \epsilon dW + \int \frac{d\overline{W}}{\bar{\epsilon}}\right), \tag{2.10}$$

where bars denote conjugates.

For conical flow it is sufficient to determine the velocity components in a plane $z =$ const., for instance in the plane $z = 1$. For $z = 1$, ϵ reduces to

$$\epsilon = \frac{\beta(x + iy)}{1 + [1 - \beta^2(x^2 + y^2)]^{1/2}} = \frac{\beta r e^{i\omega}}{1 + (1 - \beta^2 r^2)^{1/2}} = \rho e^{i\omega}. \tag{2.11}$$

The radical in Z or ϵ vanishes along the Mach cone

$$r^2 = (x^2 + y^2) = z^2/\beta^2. \tag{2.12}$$

Its section by the plane $z = 1$ yields the "Mach circle"

$$r = 1/\beta, \qquad z = 1 \tag{2.13}$$

and in the ϵ-plane this corresponds to the unit circle

$$\epsilon = e^{i\omega}, \qquad \rho = |\epsilon| = 1. \tag{2.14}$$

Inside the Mach circle, the radicand in (2.11) is positive, and with the positive radical ϵ may be considered to be a map of the Mach circle on the inside of the unit circle $\rho = 1$ with radial direction angle ω preserved, but with a radial distortion.

A geometric representation of this transformation is shown in Fig. 1 where the point P in the plane $z = 1$ is transformed into the point P_2 in the ϵ-plane which has been placed on the $z = 1$ plane. This is done by drawing a sphere of radius $1/\beta$ through the vertex or origin O, with center on the z-axis, projecting P by means of lines parallel to the z-axis on P_1 and P_1' on this sphere, then projecting these from O back on $z = 1$ to P_2 and P_2' respectively. Indeed, note from Fig. 1 that

$$\begin{cases} \sin \alpha = r/(1/\beta) = r\beta, \\ \tan \dfrac{\alpha}{2} = \dfrac{P_2O'}{O'O} = \rho, \end{cases} \tag{2.15}$$

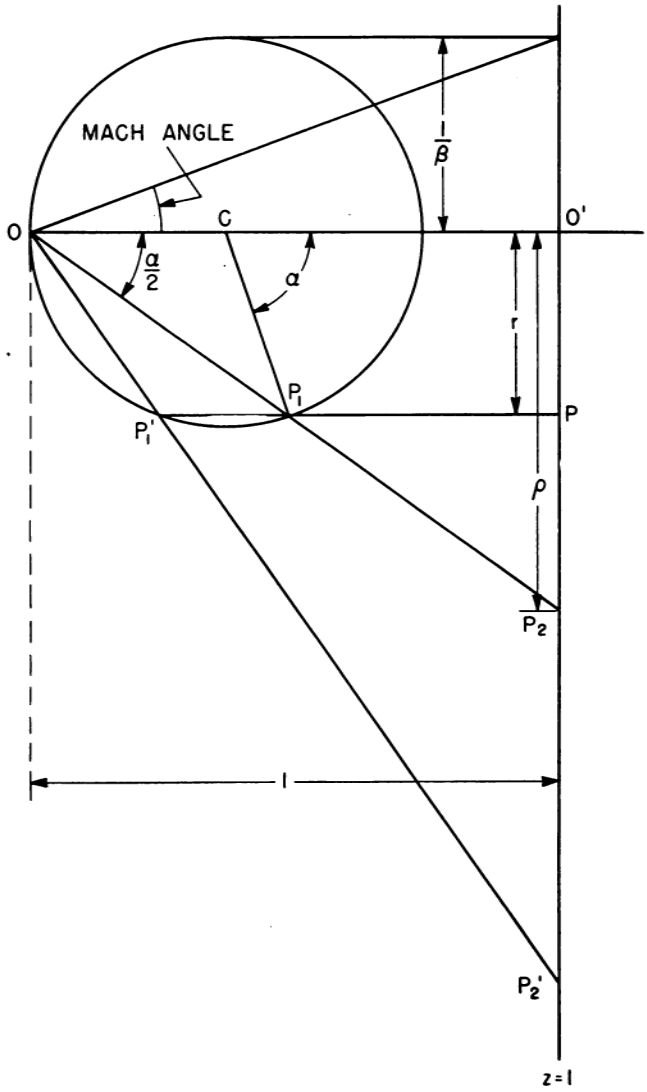

FIG. 1.

Now since

$$\tan\frac{\alpha}{2} = \frac{\sin\frac{\alpha}{2}}{\cos\frac{\alpha}{2}}$$

$$= \frac{2\sin\frac{\alpha}{2}\cos\frac{\alpha}{2}}{2\cos^2\frac{\alpha}{2}} \tag{2.16}$$

$$= \frac{\sin\alpha}{1+\cos\alpha}$$

one obtains from (2.11) and (2.15)

$$\rho = \frac{r\beta}{1 + (1 - r^2\beta^2)^{1/2}} \cdot \tag{2.17}$$

Equation (2.12), as well as the obvious fact that O, P, P_1', P_2 all lie in the same plane through OO', leads to (2.11).

On the Mach circle, that is for $r\beta = 1$, in the plane $z = 1$, the points P_1, P_1' coincide, and likewise P_2, P_2' coincide and lie on the unit circle $\rho = 1$. For P inside the unit circle, two points, P_2, P_2' are obtained in the ϵ-plane and these correspond to reciprocal values of ρ; these result from (2.17) by using a positive and negative radical.

If P lies *outside* the Mach circle, the construction of Fig. 1 fails; now the radicand in (2.11) is negative and one obtains

$$\epsilon = \frac{\beta r e^{i\omega}}{1 \pm i(\beta^2 r^2 - 1)^{1/2}} \cdot \tag{2.18}$$

As will be noted from Fig. 2, now

$$r\beta = csc\ \delta, \tag{2.19}$$

where 2δ is the angle subtended by the Mach circle $r\beta = 1$ at the point P in question, and Eq. (2.18) yields

$$\epsilon = \frac{\csc\ \delta\ e^{i\omega}}{1 \pm i \cot\ \delta} = \frac{e^{i\omega}}{e^{\pm i\delta}} = e^{i(\omega \mp \delta)}. \tag{2.20}$$

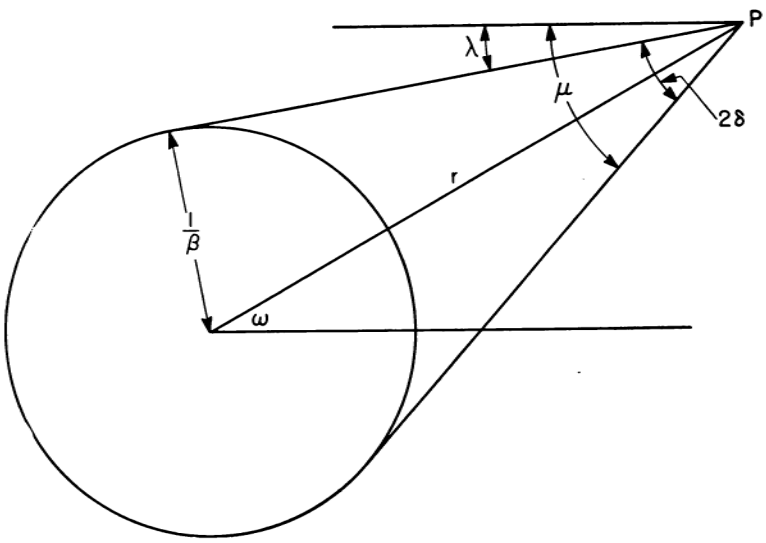

FIG. 2.

Now $\omega - \delta$, $\omega + \delta$ are the angles λ, μ made with the real axis by the tangents from P to the Mach circle. Replacing the argument ϵ in (2.5) by its function $\log \epsilon/i = \lambda, \mu$, we now obtain in place of (2.6)

$$f(\lambda) + g(\mu), \qquad \lambda = \omega - \delta, \qquad \mu = \omega + \delta \tag{2.21}$$

for the velocity components of a conical flow, where f, g are arbitrary real functions; their arguments λ, μ are constant along the tangent lines to the Mach circle.

According to Busemann[1] the introduction of ϵ is due to Chaplygin, whom he also credits with Fig. 1, and Eq. (2.10).

Recalling the alternative procedure of I, Sec. 3, one obtains in a similar fashion for homogeneous zero-degree solutions of Eq. (1.1), or through the substitution of (2.1) in I. (3.5), the following differential equations:

$$\left(1 - \frac{\beta^2 r^2}{z^2}\right)\varphi_{rr} + \left(\frac{1}{r} - \frac{2\beta^2 r}{z^2}\right)\varphi_r + \frac{\varphi_{\omega\omega}}{r^2} = 0 \tag{2.22}$$

or in (x, y)-coordinates

$$\left(1 - \frac{\beta^2 x^2}{z^2}\right)\varphi_{xx} - \frac{2\beta^2 xy}{z^2}\varphi_{xy} + \left(1 - \frac{\beta^2 y^2}{z^2}\right)\varphi_{yy} - \frac{2\beta^2(x\varphi_x + y\varphi_y)}{z^2} = 0. \tag{2.23}$$

It is sufficient to solve these for $z = 1$, and extend the solution to other values of z by replacing r by r/z.

For $z = 1$, Eq. (2.23) is elliptic for $r < 1/\beta$, hyperbolic for $r > 1/\beta$. Its characteristics are given by

$$(1 - x^2\beta^2)dy^2 + 2\beta^2 dx\, dy + (1 - y^2\beta^2)dx^2 = 0, \tag{2.24}$$

whose integration leads to the tangent lines to the circle $r = 1/\beta$ of Fig. 2.

For conical obstacles lying inside the Mach cone, the disturbance field vanishes outside the Mach circle. For conical obstacles outside the Mach cone the disturbance field in the plane $z = 1$ extends to the region enclosed by the characteristics from every point of the obstacle section and the Mach circle itself. Thus for a yawed conical fin shown in Fig. 3, the disturbance in $z =$ const. covers the horizontally shaded region consisting of the Mach circle and the region between the circle and two of its tangents through the fin end.

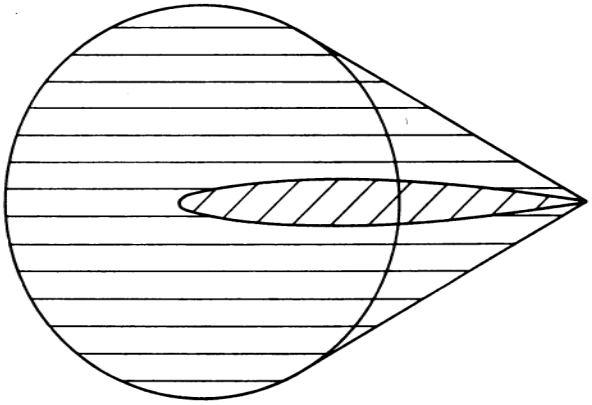

FIG. 3.

By introducing $s = \log \rho$ and ω as variables one converts Eq. (2.22) for $z = 1$ into the Laplace equation as in I. (3.9) for $r\beta < 1$, while for $r\beta > 1$, by λ, μ as in (2.22) one is led to

$$\varphi_{\lambda\mu} = 0. \tag{2.25}$$

3. Flow around cone. The simplest example of a conical flow is obtained by choosing

$$W = A \log \epsilon = A(\log \rho + i\omega) \tag{3.1}$$

where A is a real constant. The real part of this,

$$W = A \log \rho, \tag{3.2}$$

represents an axially symmetric flow: it will be shown that this flow corresponds to the disturbance produced by a circular cone of small angle placed with its axis along the z-axis. Indeed, Eq. (2.10) yields

$$u + iv = -\frac{\beta A}{2}\left(\epsilon - \frac{1}{\bar{\epsilon}}\right) = \frac{\beta A}{2}\left(\frac{1}{\rho} - \rho\right)e^{i\omega}; \tag{3.3}$$

the factor $e^{i\omega}$ shows that u, v lies in an axial plane and the factor $\rho - 1/\rho$ shows that its magnitude depends on ρ only.

If γ is the (small) cone semi-angle, then the condition

$$\frac{|u + iv|}{W_0} = \tan \gamma = \gamma \tag{3.4}$$

holds along the cone boundary $r = \tan \gamma$ (for $z = 1$) along which Eq. (2.11) yields for small βr

$$\rho = \frac{\beta r}{1 + (1 - \beta^2 r^2)^{1/2}} = \frac{\beta \tan \gamma}{2} = \frac{\beta\gamma}{2}. \tag{3.5}$$

Substituting this value in (3.4), (3.5) and neglecting ρ in comparison with $1/\rho$, one obtains

$$\frac{\beta A 2}{2\beta\gamma} = W_0\gamma, \qquad A = W_0\gamma^2 \tag{3.6}$$

and (3.1) yields

$$W = W_0\gamma^2 \log \epsilon, \qquad w = W_0\gamma^2 \log \rho. \tag{3.7}$$

Substitution from (3.7), (3.8) in (1.2) yields for the pressure rise over the conical surface

$$\frac{p - p_0}{1/2\ \rho_0 W_0^2} = 2\,\gamma^2 \log \frac{\beta\gamma}{2} = 2\,\gamma^2 \log \left(\frac{2}{\beta\gamma}\right), \tag{3.8}$$

which essentially agrees with the familiar solutions of this (linearized) problem.

It will be noted from (3.1), (3.3) that along the Mach cone through the vertex the conditions

$$u = v = w = p - p_0 = 0 \text{ for } r\beta = 1,\ p = 1 \tag{3.9}$$

hold. These conditions are satisfied by the conical flow around any conical obstacle lying entirely inside the Mach cone.

The above example is often used to introduce the variables $\log \rho$, θ in a purely geometric and fluid-dynamic manner, namely by means of the pressure field developed around a circular cone.

4. Lift decrease near edge of wing. As a further example, consider the lift decrease near the edges of a wing in a supersonic stream placed (with its span) normally to the main flow. Away from its edges, the well-known two-dimensional flow is set up with a Prandtl-Meyer expansion on the suction side and a pressure shock on the pressure side. The approximate solution for small angles of attack α is obtained from the two-dimensional form of (1.1) (see for instance, Durand[4]) and yields equal and opposite pressure changes $\pm \Delta p$ on both sides, confined to dihedral Mach angles $\cot^{-1}\beta$ to each side of the wing, as shown in Fig. 4, and given by

$$\pm \Delta p = \pm \rho_0 W_0^2 \alpha / \beta. \tag{4.1}$$

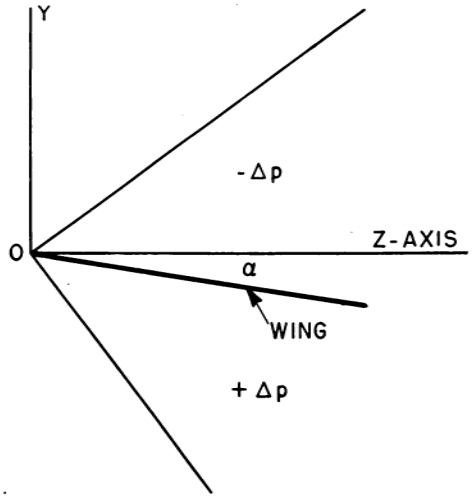

FIG. 4.

Near each edge the flow ceases to be two-dimensional. Placing the forward corner of the wing edge at the origin it is found that the disturbance due to the edge OE is conical. If the wing edge OF lies inside the Mach cone, the disturbance is confined to a Mach cone which is tangent to the dihedral angles.

We shall consider the case of a rectangular wing first (see Busemann[1]). For this case Fig. 5 shows the Mach cones of disturbance at each edge, and Fig. 6 the section by the plane $z = 1$.

Proceeding far enough down stream one comes to the end of the wing and the flow is further disturbed, but this disturbance is only felt down stream and does not affect the conical flow in the Mach cone originating from each forward vertex.

The boundary values for the pressure $p - p_0$ are given in Fig. 6 and are as follows:

$$\frac{p - p_0}{\Delta p} = \begin{cases} -1 \text{ over } AB, \\ +1 \text{ over } AD, \\ 0 \text{ over } BCD. \end{cases} \tag{4.2}$$

Similar conditions apply to w which is related to $p - p_0$ through (1.2). It will be noted

[4]W. F. Durand, *Aerodynamic theory*, Vol. 3, Springer, Berlin, 1935, p. 235.

that (3.9) is violated, which is not surprising since the wing does not lie inside the Mach cone.

In addition to (4.2) there is a condition over AO. To determine the latter note the boundary condition

$$v = -w_0 \tan \alpha = -w_0\alpha, \tag{4.3}$$

which holds to each side of the wing surface, and which we apply over its projection on $y = 0$. Differentiation of (4.3) yields

$$\frac{\partial v}{\partial z} = 0. \tag{4.4}$$

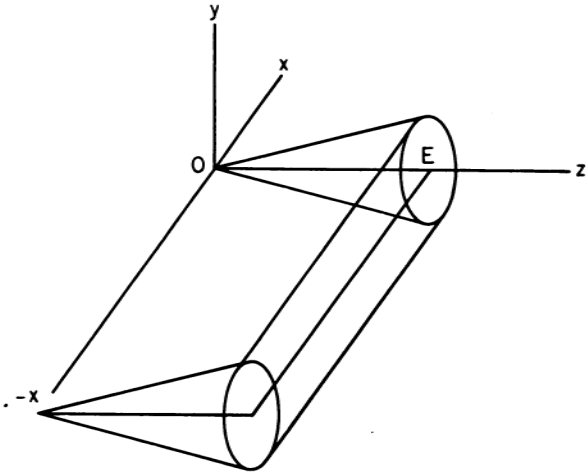

FIG. 5.

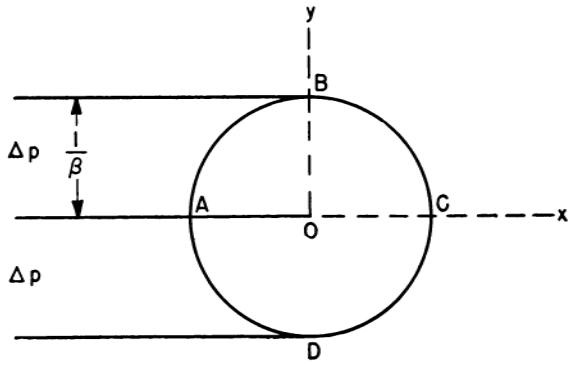

FIG. 6.

From the conditions of vanishing velocity curl, one now obtains from (4.4)

$$\frac{\partial w}{\partial y} = 0. \tag{4.5}$$

This boundary condition enables one to continue w (and hence $p - p_0$ which is proportional to w) from one side of the wing section AO to the other side by means of *positive* reflection across AB. It must be kept in mind that the reflection refers to the analytic continuation of w across the boundary, and not to the flow actually existing on the other side. The condition (4.4) and the reflection is applied separately to the flow above and below AO.

Carrying out a positive reflection for w and p from above AO, and similar reflection from below, it is found that the values obtained for both images are the negatives of the actual values obtaining in the physical flow at the same points. Thus w, p are single-valued over a "two-sheeted Riemann surface" which has a second-order branch point at O. The relation

$$\epsilon_1 = \epsilon^{1/2} \tag{4.6}$$

maps the two-sheeted interior of the unit circle of the ϵ-plane into the single-sheeted interior of the unit circle in the ϵ_1-plane with $OABCDA$ of Fig. 6 going into the semicircle $OABCDA$ of Fig. 7. In the ϵ_1-plane the boundary values for $(p - p_0)/\Delta p$

are as follows

$$\frac{p - p_0}{\Delta p} = \begin{cases} 0 \text{ over } DCB, \\ -1 \text{ over } BAB', \\ 0 \text{ over } B'D', \\ 1 \text{ over } D'AD. \end{cases} \tag{4.7}$$

Discontinuities for w, p occur at B, $\epsilon_1 = i^{1/2}$ and at D, $\epsilon_1 = -i(i)^{1/2}$ as well as at their images in AOA, B', $\epsilon_1 = i(i)^{1/2}$; D', $\epsilon_1 = -i^{1/2}$. In terms of ϵ_1 we may set up $(p - p_0)$ as follows:

$$\frac{p - p_0}{\Delta p} = \frac{1}{\pi}(\theta_1 - \theta_2 - \theta_3 + \theta_4) = Re\left[-\frac{i}{\pi}\ln\frac{(\epsilon_1 - i^{1/2})(\epsilon_1 + i\{i\}^{1/2})}{(\epsilon_1 - i\{i\}^{1/2})(\epsilon_1 + i^{1/2})}\right] \tag{4.8}$$

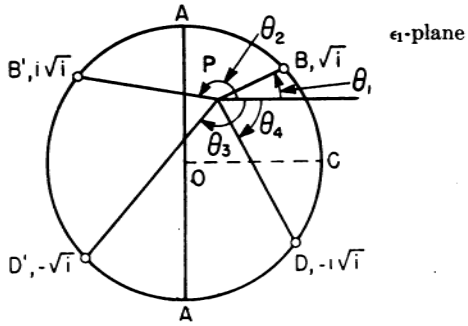

FIG. 7.

where θ_1, θ_2, $\cdots$ as shown in Fig. 9, are the arguments of the factors $\epsilon_1 - i^{1/2}$, $\cdots$ w is obtained by dividing $p - p_0$ by $-W_0\rho_0$. In particular along AA, θ_i simplify; thus

$$\theta_1 = \tan^{-1}\frac{\rho^{1/2} - 2^{-1/2}}{2^{1/2}} = \tan^{-1}[(2\rho)^{1/2} - 1], \tag{4.9}$$

and one obtains from (4.8) for the local lift coefficient along OA of Fig. 5, as a ratio to the lift along the wing proper,

$$\frac{2}{\pi}\tan^{-1}\frac{(2\rho)^{1/2}}{1 - \rho} = \frac{2}{\pi}\sin^{-1}\left[\frac{2\rho}{1 + \rho^2}\right]^{1/2}. \tag{4.10}$$

Utilizing the relation

$$\beta r = \frac{2\rho}{1 + \rho^2} \tag{4.11}$$

which follows from (2.11), one may replace (4.10) by

$$\frac{2}{\pi}\sin^{-1}(\beta r)^{1/2} = \frac{2}{\pi}\cos^{-1}(1 - \beta r)^{1/2} = \frac{1}{\pi}\cos^{-1}(1 - 2\beta r). \tag{4.12}$$

Replacing r by $-x$ and averaging from $x = 0$ to $x = -1/\beta$, one obtains

$$\frac{\beta}{\pi}\int_{-1/\beta}^{0} \cos^{-1}(1 + a\beta x)\,dx = \frac{1}{2\pi}\int_{-1}^{1} \cos^{-1} u\,du = \frac{1}{2}. \tag{4.13}$$

The net decrease in lift over the area within the Mach cone due to the edge effect is thus 50%.

We turn now to a trapezoidal wing (see Fig. 8) whose edges make an angle $\pi/2 + \gamma$

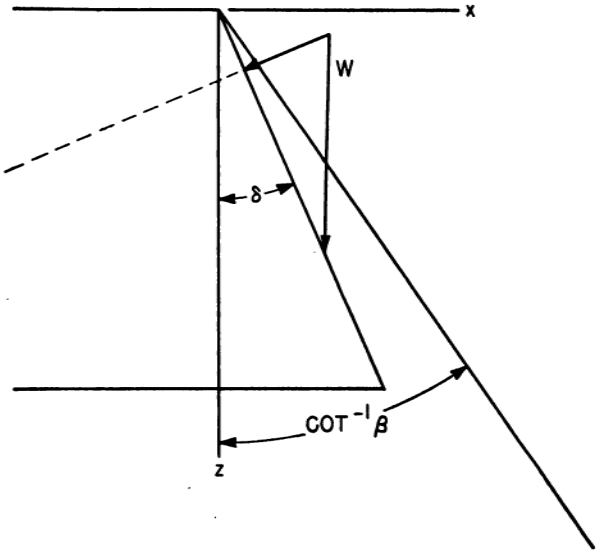

FIG. 8.*

with the forward edge, where

$$0 < \gamma < \cot^{-1}\beta. \tag{4.14}$$

Figure 6 is now replaced by Fig. 9 and in the ϵ-plane the Mach circle is transformed into the unit circle of Fig. 10.

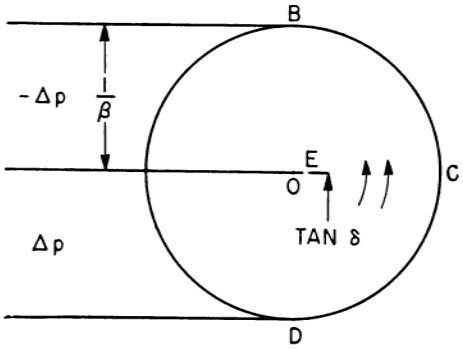

FIG. 9.*

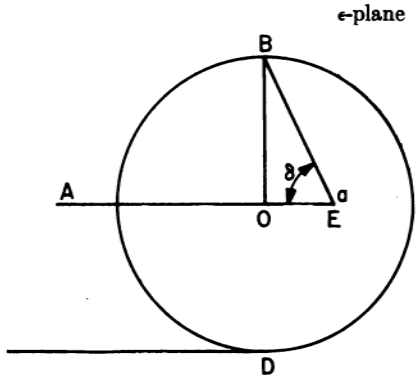

FIG. 10.

with the point E going into $\epsilon = a$ where

Note added in proof: δ in Figs. 8 and 9 should be replaced by γ.

$$a = \frac{\beta \tan \gamma}{1 - (1 - \beta^2 \tan^2 \gamma)^{1/2}}. \tag{4.15}$$

The boundary conditions along $\rho = 1$ are still given by (4.7), while (4.5) now obtains our AOE. By means of

$$\epsilon' = \frac{a - \epsilon}{a\epsilon - 1} \tag{4.16}$$

one transforms the unit circle in the ϵ-plane into a unit circle in the ϵ'-plane (see Fig. 11)

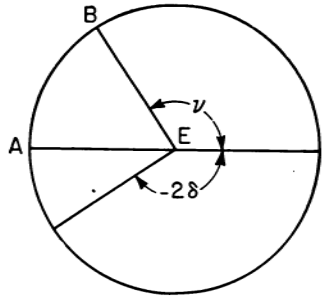

FIG. 11.

with the slit AOE going into the radius along the negative real axis. The point B, $\epsilon = i$ of Fig. 9 goes into

$$\epsilon' = \frac{a - i}{ai - 1} = -i\frac{a - i}{a + i} = e^{i\nu}$$
$$\nu = -2\delta - \pi/2, \qquad \delta = \cot^{-1} a. \tag{4.17}$$

Analytic continuation by means of positive reflection across AE of Figs. 10, 11 is possible and similarly leads to a single valued function in the

$$\epsilon_1 = \epsilon'^{1/2} \tag{4.18}$$

plane, with Fig. 7 replaced by a similar figure but (see Fig. 12) with the discontinuity

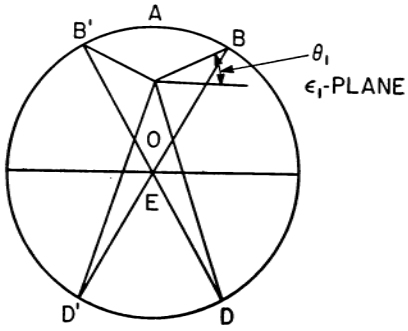

FIG. 12.

points B, B', D, D' replaced by points making angles $\pm\nu/2$ with the directions of positive and negative ϵ_1. A solution analogous to (4.8) is now given by

$$\frac{p - p_0}{\Delta p} = \frac{1}{\pi}(\theta_1 - \theta_2 - \theta_3 + \theta_4) = Re\left[-\frac{i}{\pi}\ln\frac{(\epsilon_1 - e^{i\nu/2})(\epsilon_1 - e^{-i\nu/2})}{(\epsilon_1 + e^{-i\nu/2})(\epsilon_1 + e^{i\nu/2})}\right] \tag{4.19}$$

The solution just obtained (for $p - p_0$ and hence also for w), while it satisfies all the boundary conditions, will not do, however, for the following reason: since the wing possesses lift and builds up a pressure rise and fall Δp on the lower and upper sides respectively, there is a tendency to set up circulation around each edge, similar to the circulation of an incompressible fluid around the edges of an airfoil of finite span, and responsible for induced drag. Since the component of the main flow normal to the wing edge, $W_0 \sin \gamma$, is subsonic when (4.14) holds, this flow around the edge (indicated by arrows on Fig. 9) possesses a singularity at the edge similar to that of an incompressible fluid, leading to infinities of the form

$$A(\epsilon - a)^{-1/2} \tag{4.20}$$

in the functions U, V, W. This type of singularity arises also in the case $\gamma = 0$, but there it affects only u and v and not w*. For $\gamma > 0$, the flow lines due to this singular flow lie essentially in planes normal to the edge, and W is also affected by it.

To introduce the required singularity one adds to (4.18)

$$Re\left[\frac{C}{i}\left(\frac{1}{\epsilon_1} - \epsilon_1\right)\right] = C\left(\frac{1}{\rho_1} - \rho_1\right) \sin \omega_1 . \tag{4.21}$$

This vanishes for $\rho_1 = 1$ and hence does not interfere with (4.7); it also satisfies (4.5) over AOE of Fig. 9. Thus C in (4.20) cannot be determined from considerations of $p - p_0$, w only. It may be found, however, by means of the relation

$$\left.\frac{dW}{d\epsilon}\right|_{\epsilon=0} = 0 \tag{4.22}$$

without which (4.19), (2.8), and (2.9) would yield singularities for U and W at $\epsilon = 0$. One is lead to

$$C = -\frac{4a}{1 - a}\frac{a - \cos(\nu/2)}{a^2 + 2a \cos \nu + 1} . \tag{4.23}$$

This completes the determination of $p - p_0$ and w.

For negative γ with the wing edge still in the Mach cone, a Kutta-Joukowsky condition holds at the edge and the solution (4.19) has to be properly modified. No singularity is introduced at the edge.

The case $\gamma > \cot^{-1}\beta$ has been treated by Snow[3].

5. Non-conical flows. Harmonic functions of various degrees of homogeneity were considered in I, Sec. 4. By means of the substitutions (1.6), (2.1)–(2.3) they can lead to solutions of (1.1) of similar degree of homogeneity.

As an example, familiar harmonic functions of degree n, $-(n + 1)$ of the "product" type are given by

$$[R^n, R^{-(n+1)}]P_n^m(\cos \theta)[\cos m\omega, \sin m\omega], \tag{5.1}$$

where P_n^m are the "associated" Legendre functions, and $\cos \theta = z/R$. Carrying out

*It is introduced by the integrations (2.8)–(2.10).

the indicated substitutions in (5.1), we obtain the following solutions of the wave equation (1.1) for the supersonic case (see Hayes[5]):

$$(z^2 - \beta^2 r^2)^{[n/2, -(n+1)/2]} P_n^m(z/\{z^2 - \beta^2 r^2\}^{1/2})(\cos m\omega, \sin m\omega); \tag{5.2}$$

additional solutions of the same product form may be obtained by utilizing the associated Legendre functions of the "second kind," Q_n^m, in place of P_n^m. In particular, $m = 0$ yields the axially symmetric solutions:

$$(z^2 - \beta^2 r^2)^{[n/2, -(n+1)/2]} P_n[(1 - \beta^2 r^2/z^2)^{-1/2}]. \tag{5.3}$$

The velocity potential for the flow around an axially symmetric body with axis along the z-axis possesses this symmetry.

As a special case for $n = 0$ and the second exponent in the first factor in (5.3), there results

$$(z^2 - \beta^2 r^2)^{-1/2}. \tag{5.4}$$

This is the potential of a "point source" at the origin; it is of degree -1. The velocity *components* for the same symmetric flow, as well as part of the velocity potential due to transverse flow around an axially symmetric body, possess the type of symmetry obtained from (5.3) for $m = 1$.

General solutions of (1.1) of degree n are obtained from I, (4.21), (4.22) by introducing ϵ and the substitutions (2.1) to (2.3).

In particular I.(4.21) yields

$$\varphi = \epsilon(z^2 - \beta^2 r^2)^{1/2} \frac{df(\epsilon)}{d\epsilon} + zf(\epsilon) \tag{5.5}$$

for a general solution of (1.1) of degree 1. The real part of this could be used as a starting point for the velocity potential of conical flows. The requisite boundary condition is given by

$$\varphi_x \lambda_x + \varphi_y \lambda_y + \varphi_z \lambda_z + W_0 \lambda_z = 0, \tag{5.6}$$

where $(\lambda_x, \lambda_y, \lambda_z)$ are the direction cosines of the normal n to the conical boundary. Neglecting $\varphi_z = w$ in comparison with W_0, one may transform the above into

$$\varphi_x \lambda_x' + \varphi_y \lambda_y' = \left(\frac{x}{z} \lambda_x' + \frac{y}{z} \lambda_y'\right) W_0, \tag{5.7}$$

where $(\lambda_x', \lambda_y', 0)$ are the direction cosines of the normal n' to the boundary section by a plane $z =$ const., this normal lying in that plane (see Fig. 13). Equation (5.7) can be put in the form*

---

[5]W. D. Hayes, *Linearized supersonic flows with axial symmetry*, Q. Appl. Math. **4**, 255-261 (1946).

*In principle, the singularity of the flow field of Section 8 at A, A' could be obtained by replacing the wing with its sharp edges by a boundary of finite curvature, solving flow subject to (5.8), then passing to the limit as the original wing with its sharp edge is restored.

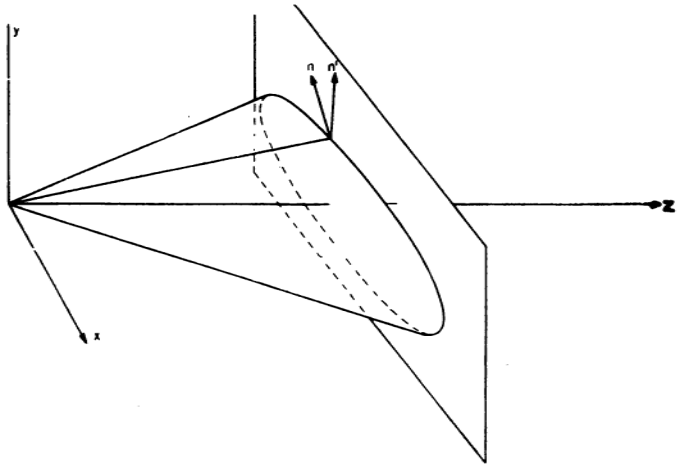

FIG. 13.

$$\frac{\partial \varphi}{\partial n'} = \frac{W_0}{2z}\frac{\partial(r^2)}{\partial n'} = \frac{W_0}{z}[x \cos (n'x) + y \sin (n'x)], \tag{5.8}$$

where (n, x) is the angle between the normal n' and the x-axis.

By superposition of conical flows and of solutions of other degrees of homogeneity, flows around a great variety of profiles may be obtained.